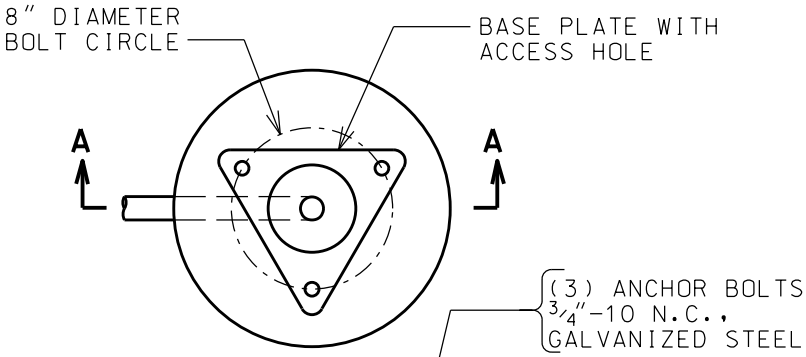


**PLAN**

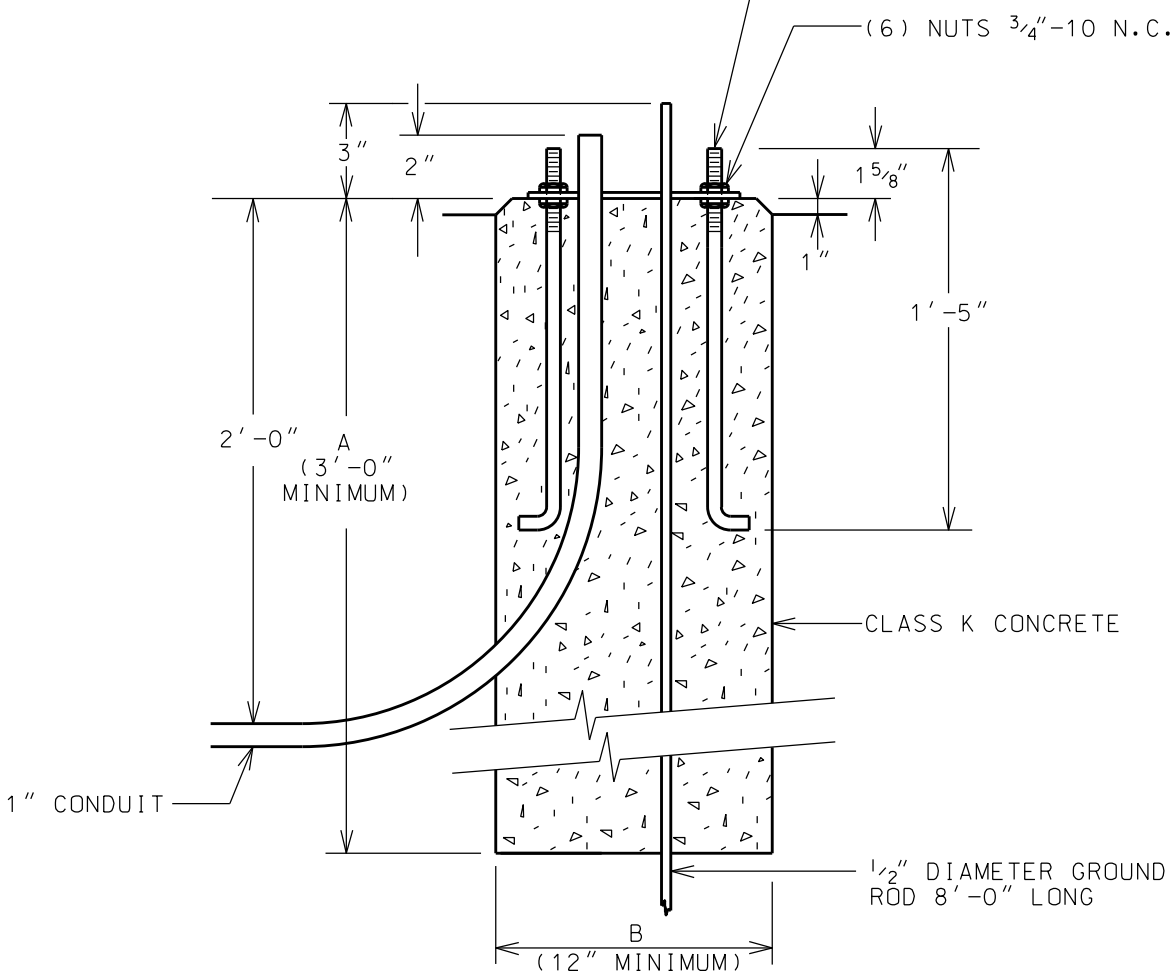


**SECTION A-A**

NOTES:

1. ANCHOR BOLTS, NUTS, GROUND ROD, CONDUIT, AND TEMPLATE WILL BE FURNISHED BY CITY OF ROCHESTER FIRE DEPARTMENT, ALARM DIVISION.
2. DIMENSIONS A AND B TO BE AS SPECIFIED BY CUSTOMER SPECIFICATION.

| CITY OF ROCHESTER | |
|---|---|
| **FIRE ALARM POLE FOUNDATION** | |
| ISSUED 9-2-91 | STD. DWG. NO. R653-1 |
| REVISED | |