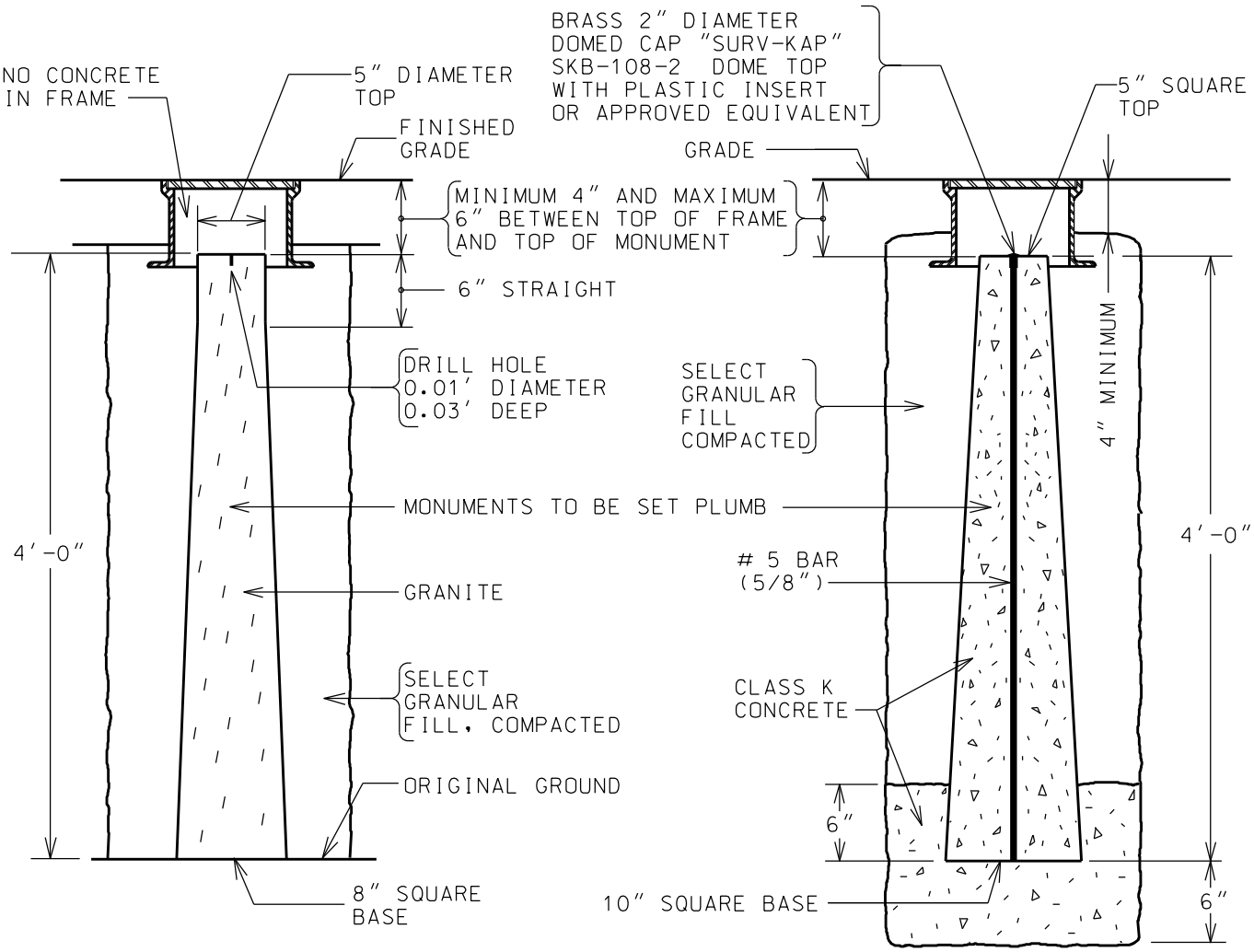

HORIZONTAL CONTROL MONUMENT (RCS)

VERTICAL CONTROL MONUMENT (RTS)

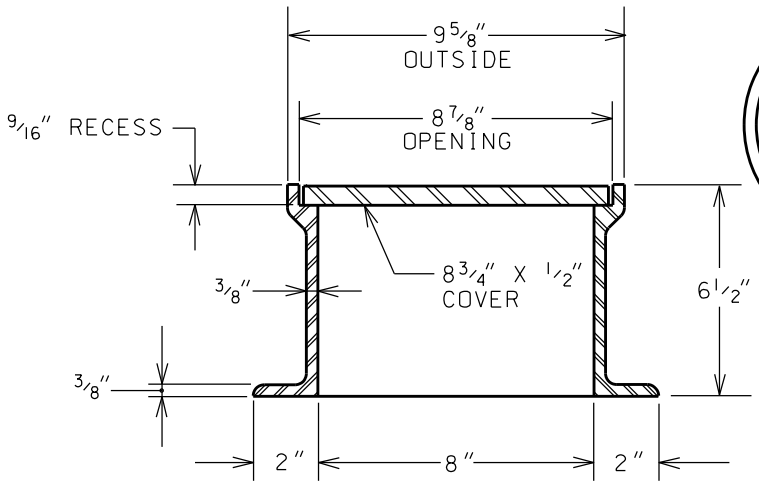

CAST IRON FRAME AND COVER

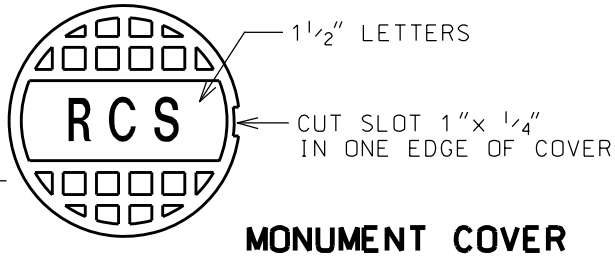

MONUMENT COVER

CITY OF ROCHESTER	
MONUMENTS	
ISSUED 9-2-91	STD. DWG.
REVISED 10-21-03	NO. R626-1