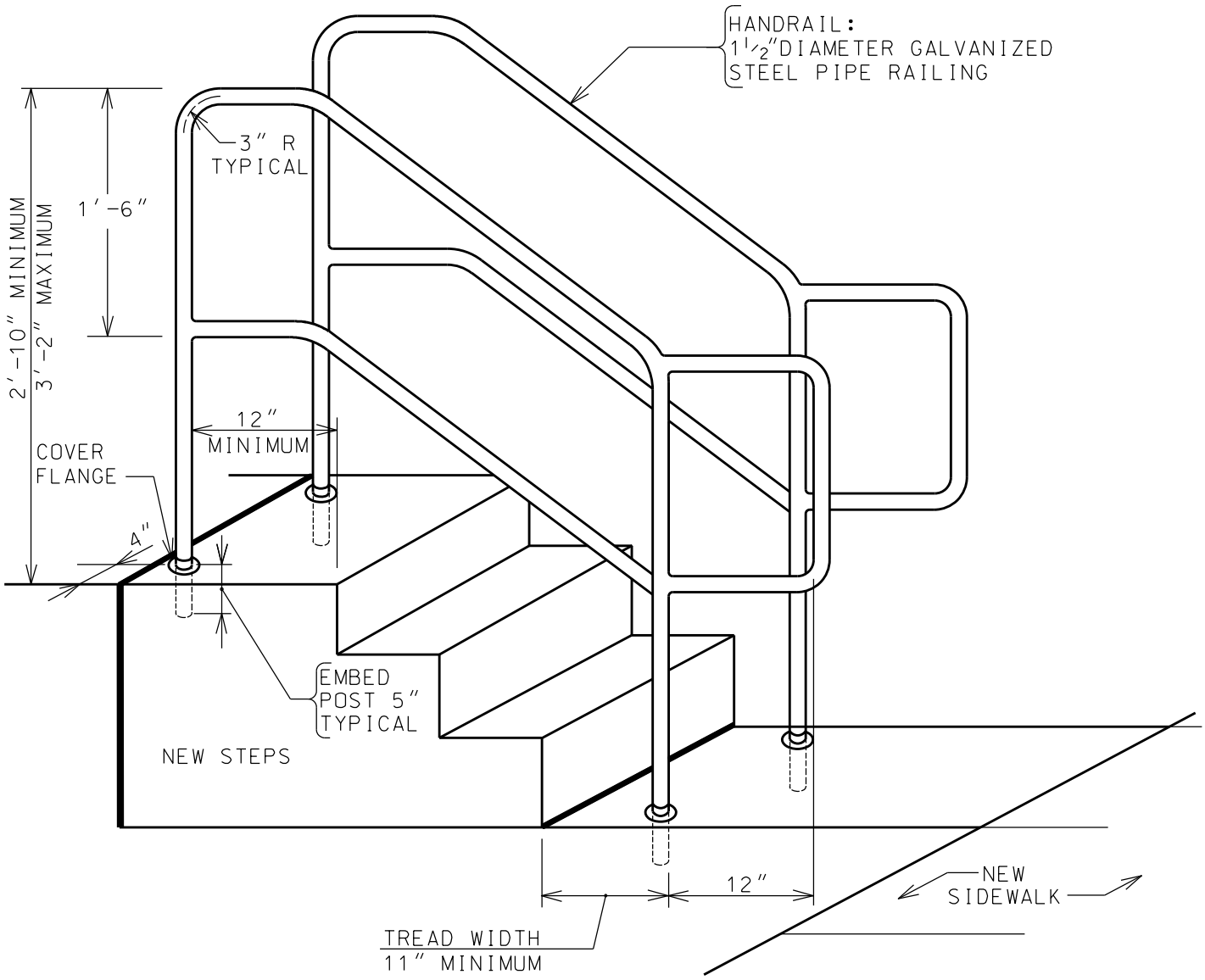

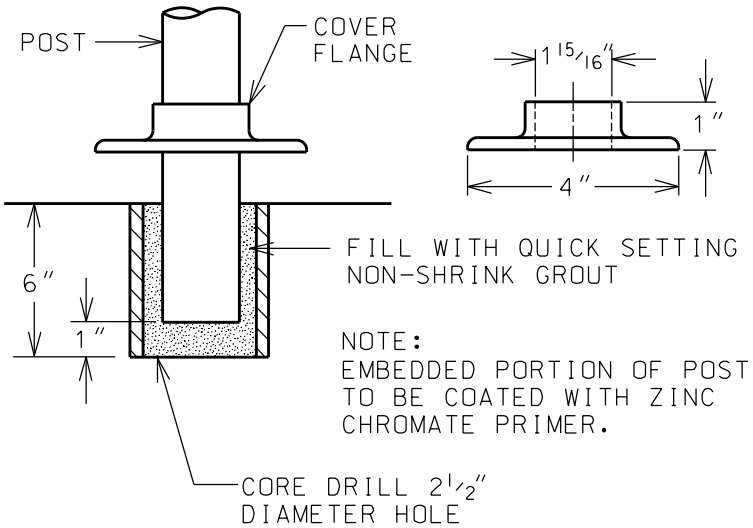

COVER FLANGE ASSEMBLY

NOTE

HANDRAILS MUST BE PROVIDED WHEN THERE ARE THREE OR MORE RISERS.

CITY OF ROCHESTER

COMMERCIAL HANDRAIL

ISSUED	5-17-94	NON-STANDARD
REVISED	9-30-98	DWG.NO.S563-1