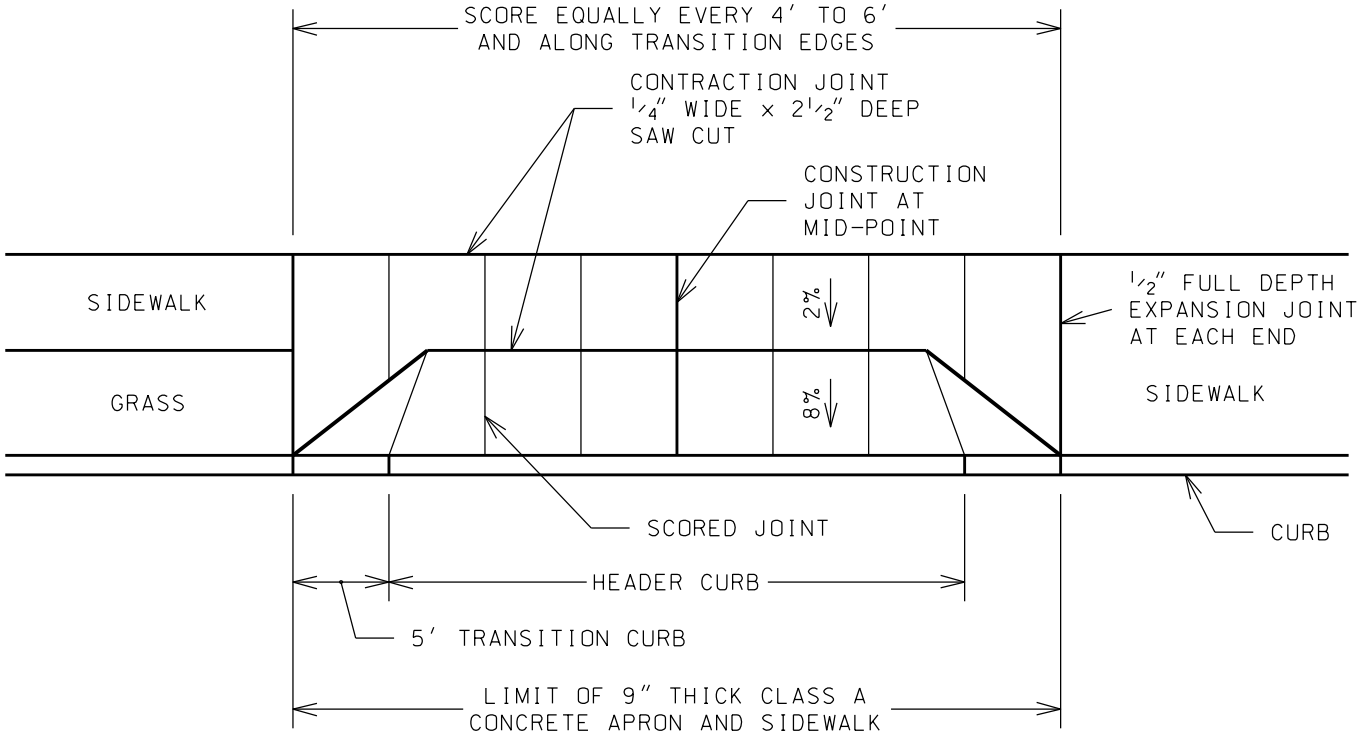

PLAN

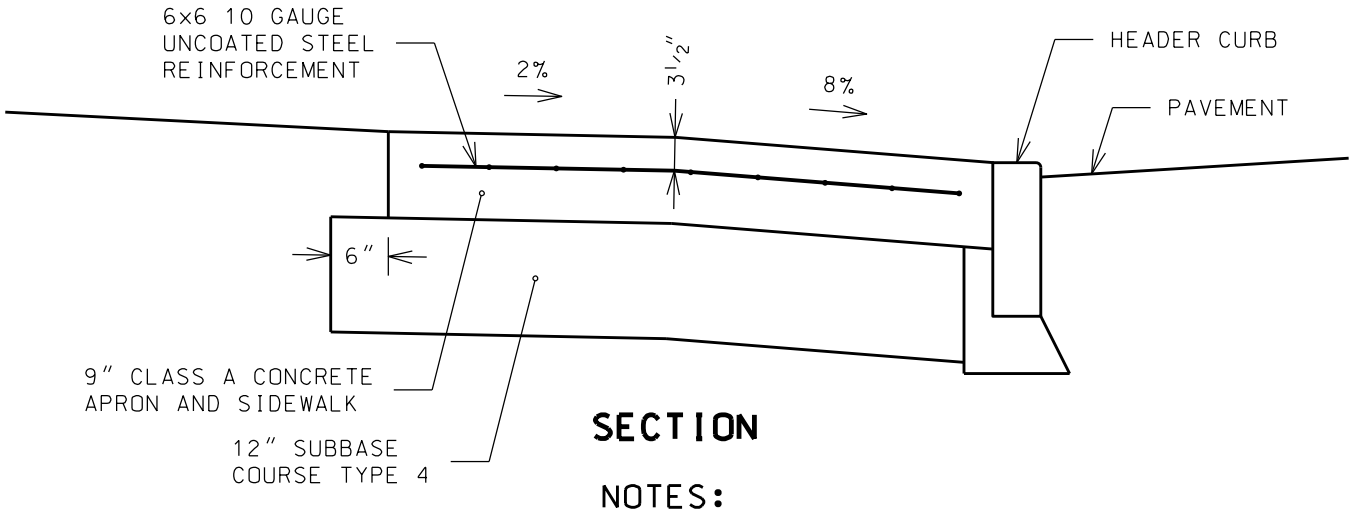

SECTION

NOTES:

1. THIS DRIVEWAY SECTION IS TO BE USED ONLY WHERE DAILY VOLUME OF OVERSIZED VEHICLES REQUIRES ADDITIONAL STRUCTURAL SUPPORT, AND ONLY WHERE APPROVED FOR USE BY THE CITY.
2. WIDTH OF DRIVEWAY AND LENGTH OF HEADER CURB WILL BE AS APPROVED BY THE CITY.

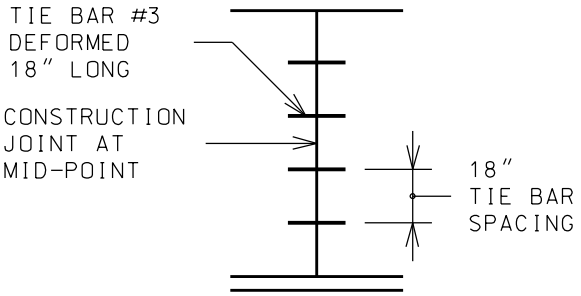

CONSTRUCTION JOINT DETAIL

CITY OF ROCHESTER	
HEAVY-DUTY COMMERCIAL CONCRETE DRIVEWAY	
ISSUED 2-10-00	NON-STANDARD
REVISED 3-25-06	DWG.NO.S608-25