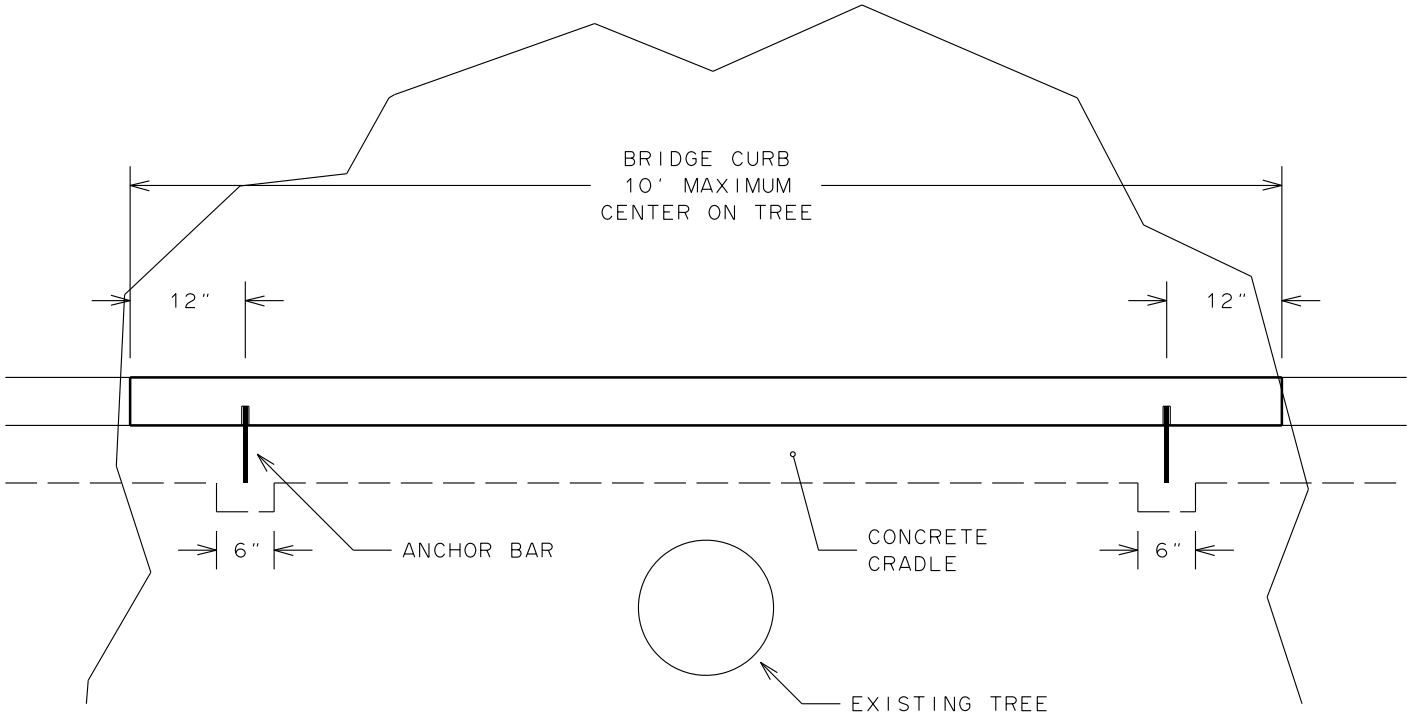

PLAN

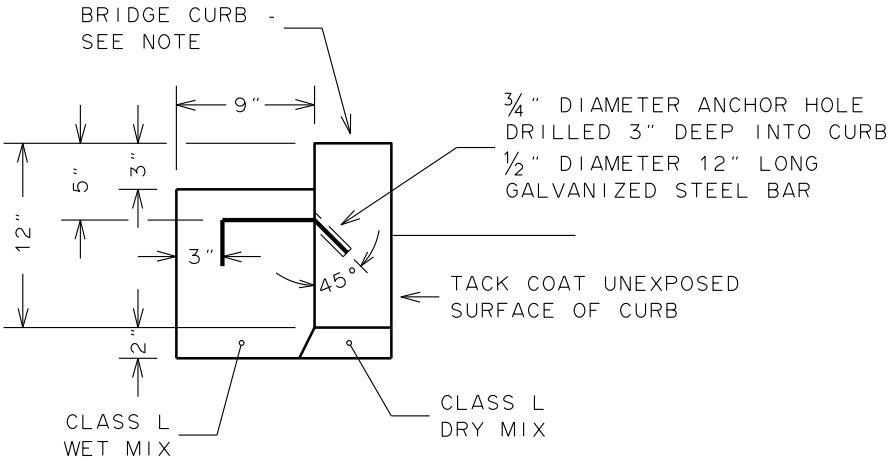

SECTION

NOTE:

TOP OF CURB THICKNESS IS TO BE AS REQUIRED IN CONTRACT DOCUMENTS.

CITY OF ROCHESTER		
BRIDGE STONE CURB		
ISSUED	9-2-91	STANDARD
REVISED	2-25-14	DWG.NO.R609-2